# Pre-Lab 3: Node Analysis Methods

## 1. Node Analysis

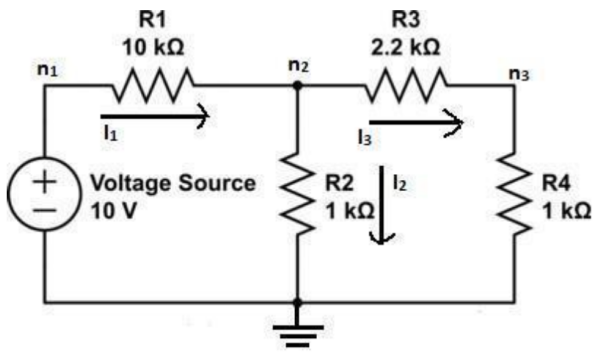


Figure 3.1

A. The voltage across resistor $R_4$ is $V_4 = V_2 \frac{1\,\text{k}\Omega}{3.2\,\text{k}\Omega}$

B. Voltages $n_i$ and currents $I_k$

   a. $R_{34} = 3.2\,\text{k}\Omega$, $R_p = R_{342} = \frac{1}{\frac{1}{3.2\,\text{k}\Omega}+1\,\text{k}\Omega} = 0.762\,\text{k}\Omega$, and $R_{eq} = 10.767\,\text{k}\Omega$

   b. $I_1 = \frac{V_s}{R_{eq}} = 929\,\mu\text{A} \Rightarrow I_1 = I_2 + I_3 = \frac{n_2}{1\,\text{k}\Omega} + \frac{n_2}{3.2\,\text{k}\Omega} \Rightarrow n_2 = V_2 = \frac{I_1}{\frac{1}{3.2\,\text{k}\Omega}+1\,\text{k}\Omega} = 708\,\text{mV}$.

   c. $I_1 = 929\,\mu\text{A}$, $I_2 = \frac{708\,\text{mV}}{1\,\text{k}\Omega} = 708\,\text{mA}$, $I_3 = \frac{708\,\text{mV}}{3.2\,\text{k}\Omega} = 221\,\mu\text{A}$

   d. $n_1 = 10\,\text{V}$, $n_2 = 708\,\text{mV}$, $n_3 = V_4 = n_2\left(\frac{1\,\text{k}\Omega}{3.2\,\text{k}\Omega}\right) = 221\,\text{mV}$

C.

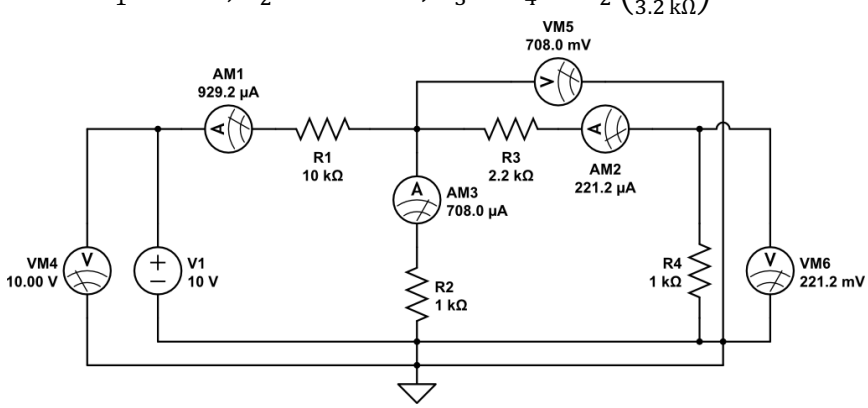

## 2. Nodal Analysis with Current-Dependent Voltage Source

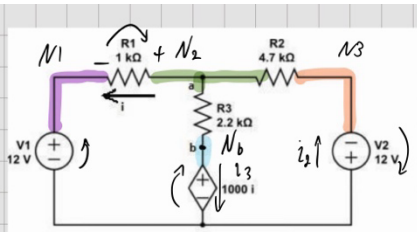


Figure 3.2

$N_2: \quad i + i_3 = i_2 \Rightarrow i = i_2 - i_3$

$N_3: \quad -12V = n_3 = V_2$

$N_1: \quad 12V = n_1 = V_1$

$N_4: \quad (1k\Omega)i =$

1) define $i$

$$i = \frac{V_a - V_1}{R_1} = \frac{V_a - 12}{1000} =$$

$$V_b = 1000i = 1000\left(\frac{V_a - 12}{1000}\right) = V_a - 12$$

A) $i = \frac{3.292 - 12}{1000} = -8.708\ mA$

B) $V_{ab} = V_a - V_b = 12V$

2) KCL

$$\frac{V_a - 12}{1000} + \frac{V_a - (-12)}{4700} + \frac{V_a - V_b}{2200} = 0$$

$V_b = V_a - 12 \Rightarrow$

$$\frac{V_a - 12}{1000} + \frac{V_a + 12}{4700} + \frac{12}{2200} = 0$$

$$\frac{V_a}{1000} - \frac{12}{1000} + \frac{V_a}{4700} + \frac{12}{4700} + \frac{12}{2200} = 0$$

$$V_a\left(\frac{1}{1000} + \frac{1}{4700}\right) = \frac{12}{1000} - \frac{12}{4700} - \frac{12}{2200}$$

$$V_a = 3.292\ V$$